Wall-hung boilers (condensing combi)

25/30MKV-A Lynx Condens (H-UA)

04 - Burner

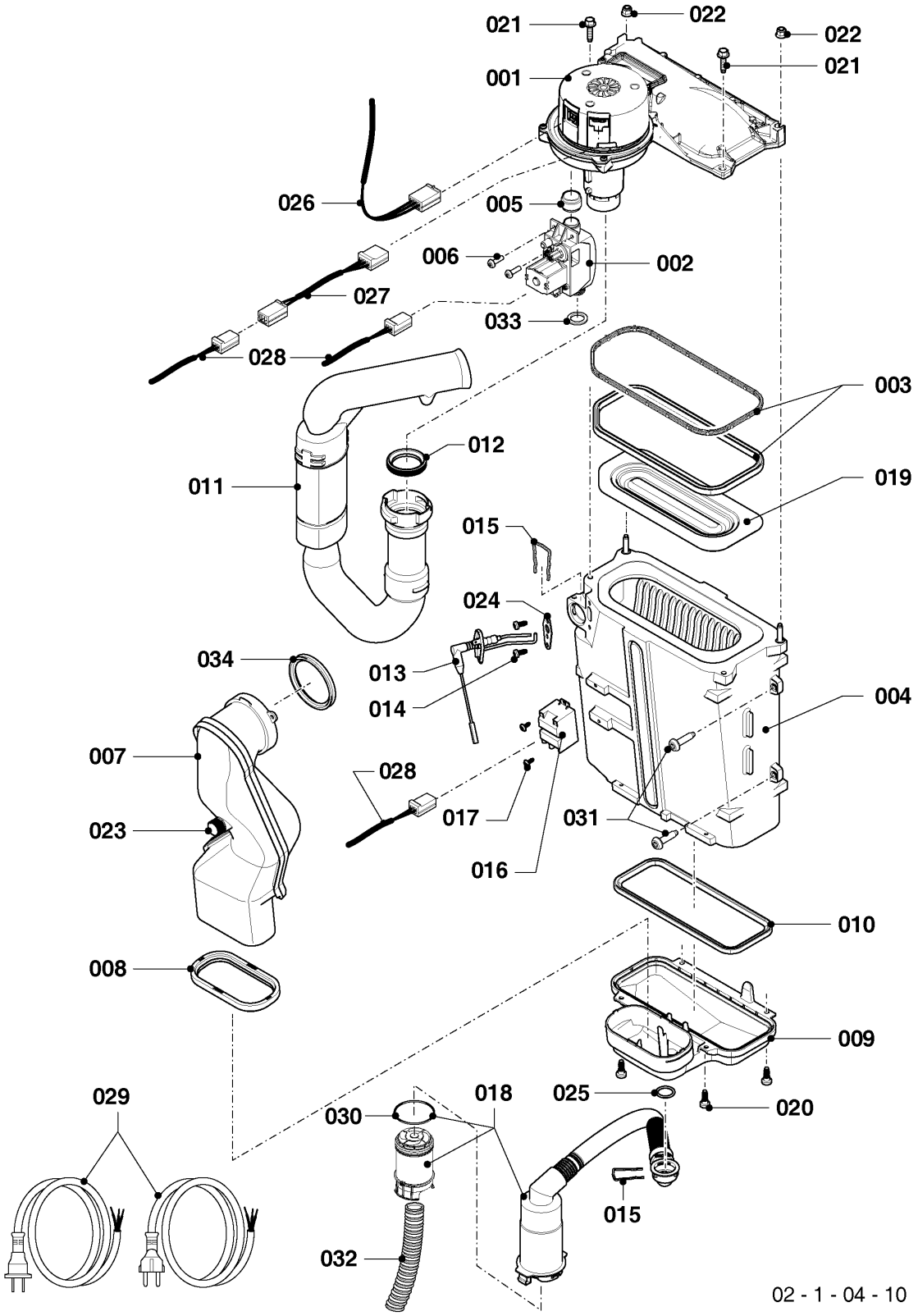

Wall-hung boilers (condensing combi)

25/30MKV-A Lynx Condens (H-UA)

04 - Burner

Поз.	Артикульный номер	Описание	Указание, замечание
001	0020195509	Fan, with combustion chamber cover	25/30MKV-A Lynx Condens (H-UA), with parts Pos. 003, 005, 006, 012, 021, 022, 033
002	0020195511	Gas control valve, -5Pa	with parts 005, 006, 033
003	0020195512	Gasket, combustion chamber cover	with part 033
004	0020195514	Heat exchanger	25/30MKV-A Lynx Condens (H-UA), with parts 03, 08, 09, 10, 12, 14, 15, 17, 20, 21, 22, 24, 25, 31
005	0020195515	Gasket	
006	0020195516	Screw, (x10)	
007	0020195518	Flue pipe	25/30MKV-A Lynx Condens (H-UA), with parts 08, 23, 34
008	0020195519	Gasket	
009	0020195521	Condensate drain	with parts 08, 10, 15, 20, 25, 31
010	0020195522	Gasket, Condensate drain	with parts 08, 15, 20, 25, 31
011	0020195523	Air inlet duct	part 12 is included at 0020152315
012	0020195524	Lip seal	
013	0020195525	Electrode (ignition and sensing)	with parts 15, 27
014	0020195526	Screw, (x10)	
015	0020014176	Clip, (x10)	
016	0020213915	Spark generator	
017	0020195527	Screw, (x10)	
018	0020195528	Siphon	with parts 15, 25, 30
019	0020195531	Burner	with parts 03, 21, 22, 33
020	0020195532	Screw, (x10)	
021	0020195533	Screw, (x10)	
022	0020018629	Nut, (x10)	
023	0020195534	Cap, (x5)	
024	0020195535	Gasket, Electrode	
025	0020195536	O-ring, (x10)	
026	0020195537	Wiring harness, Fan 230 V	not for these apliances
027	0020195583	Wiring harness, Adapter fan 230 V	not for these apliances
028	0020195584	Wiring harness	

Wall-hung boilers (condensing combi)

25/30MKV-A Lynx Condens (H-UA)

04 - Burner

Поз.	Артикульный номер	Описание	Указание, замечание
029	0020211448	Cable, power supply	
030	0020195587	O-ring	
031	0020195594	Screw, (x10)	
032	0020084549	Flexible hose	
033	0020137104	Washer 13,7-18x1,5mm (x10)	
034	0020195520	Gasket	

Wall-hung boilers (condensing combi)

25/30MKV-A Lynx Condens (H-UA)

07 - Casing parts

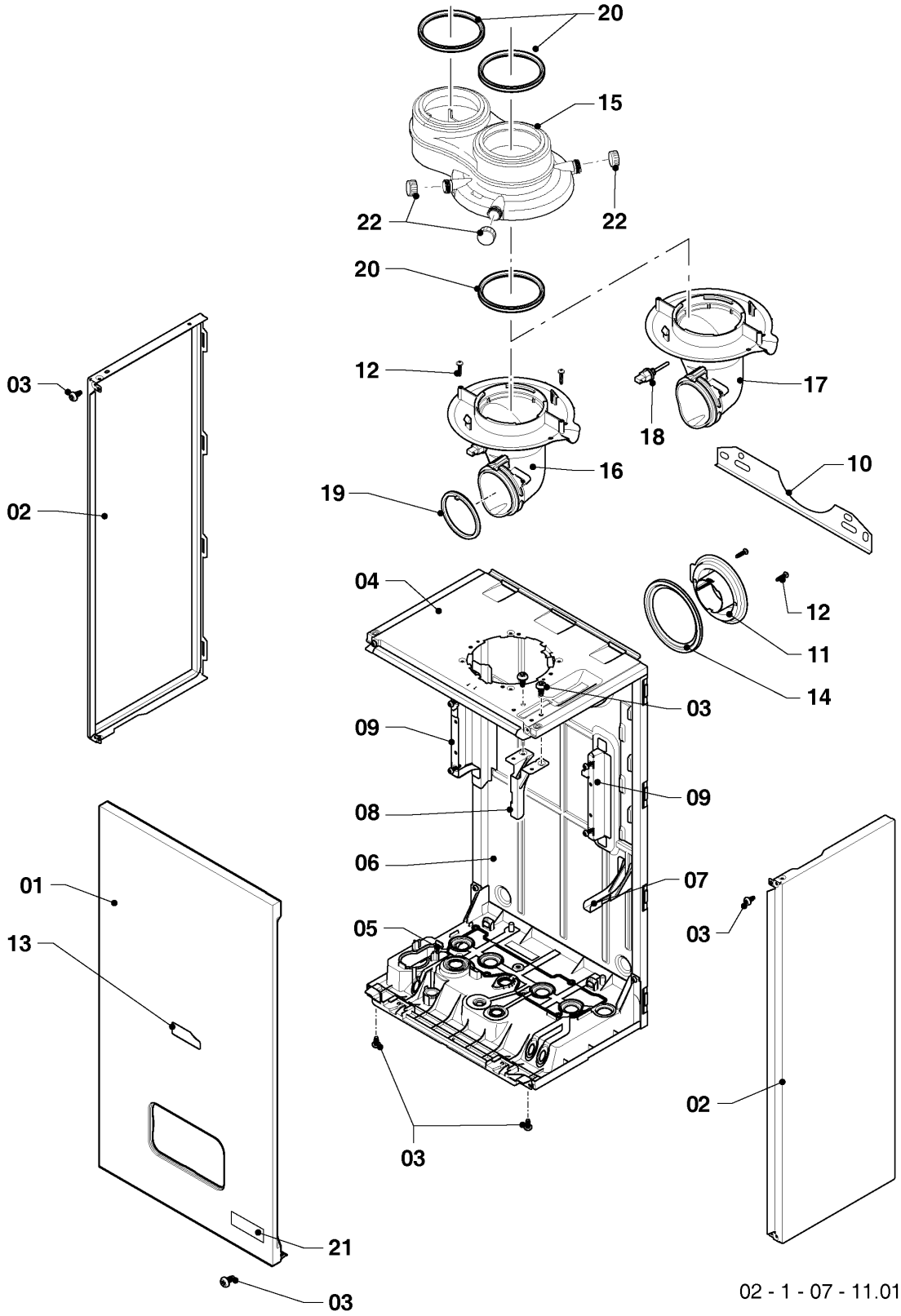

Wall-hung boilers (condensing combi)

25/30MKV-A Lynx Condens (H-UA)

07 - Casing parts

Поз.	Артикульный номер	Описание	Указание, замечание
01	0020120219	FRONT PANEL	with part 03
02	0020120222	Side panel	with part 03
03	05493300	Screw, (x25)	
04	-	-	not for these appliances
05	-	-	not for these appliances
06	-	-	not for these appliances
07	-	-	not for these appliances
08	0020195630	Support, expansion vessel	with pos. 03
09	-	-	not for these appliances
10	0020195631	Support	
11	0020020719	Cover, rear (flue outlet)	with pos. 12, 14
12	0020020720	Screw	
13	0020195632	Name badge	
14	0020026459	Gasket	
15	0020197013	Adapter, 80/80	with pos. 18, 20
16	0020195530	Adapter, flue gas	with parts 12, 17, 18
17	-	-	not for these appliances
18	-	-	not for these appliances
19	0020195520	Gasket	
20	0020038076	Gasket exchanger / flue	
21	0020197014	Plate	
22	0020195534	Cap, (x5)	

Wall-hung boilers (condensing combi)

25/30MKV-A Lynx Condens (H-UA)

08a - Hydraulic parts

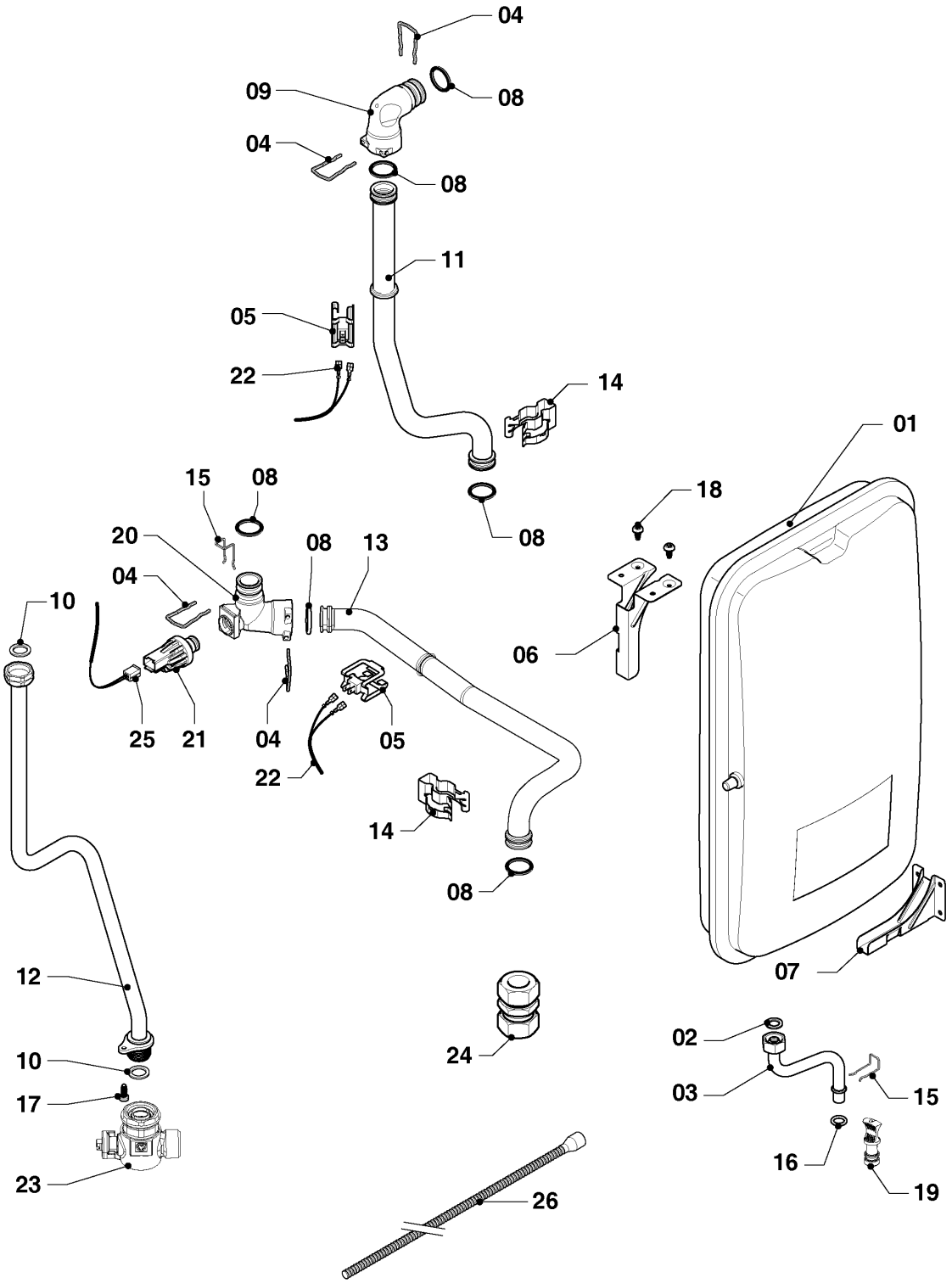

02 - 1 - 08 - 28.01

Wall-hung boilers (condensing combi)

25/30MKV-A Lynx Condens (H-UA)

08a - Hydraulic parts

Поз.	Артикульный номер	Описание	Указание, замечание
01	0020097328	Expansion vessel	with part 02
02	0020211087	Gasket, (x10)	
03	0020211088	Tube	with parts 02, 15, 16
04	0020014176	Clip, (x10)	
05	0020047027	Sensor, NTC	
06	0020195630	Support, expansion vessel	with part 18
07	-	-	not for these appliances
08	0020018487	O-ring, (x10)	
09	0020203978	Elbow	with parts 04, 08
10	0020137104	Washer 13,7-18x1,5mm (x10)	
11	0020211090	Tube	with parts 04, 08, 14
12	0020211091	Gas pipe	with part 10, 17
13	0020211093	Tube	25/30MKV-A Lynx Condens (H-UA), with parts 04, 08, 14
14	0020038250	Clip	
15	0020097197	Clip, (x10)	
16	0020014177	O-ring, (x10)	
17	S1045900	Screw, M4x12, (x10)	
18	05493300	Screw, (x25)	
19	4000121206	Plug	with parts 15, 16
20	0020203979	Elbow	with part 04, 08
21	0020079644	Sensor	with part 16, 22
22	0020195584	Wiring harness	
23	0020211096	Gas valve	
24	-	-	not for these appliances
25	0020207121	Wiring harness, combi (CLP)	
26	0020211450	Hose	

Wall-hung boilers (condensing combi)

25/30MKV-A Lynx Condens (H-UA)

08b - Hydraulic parts

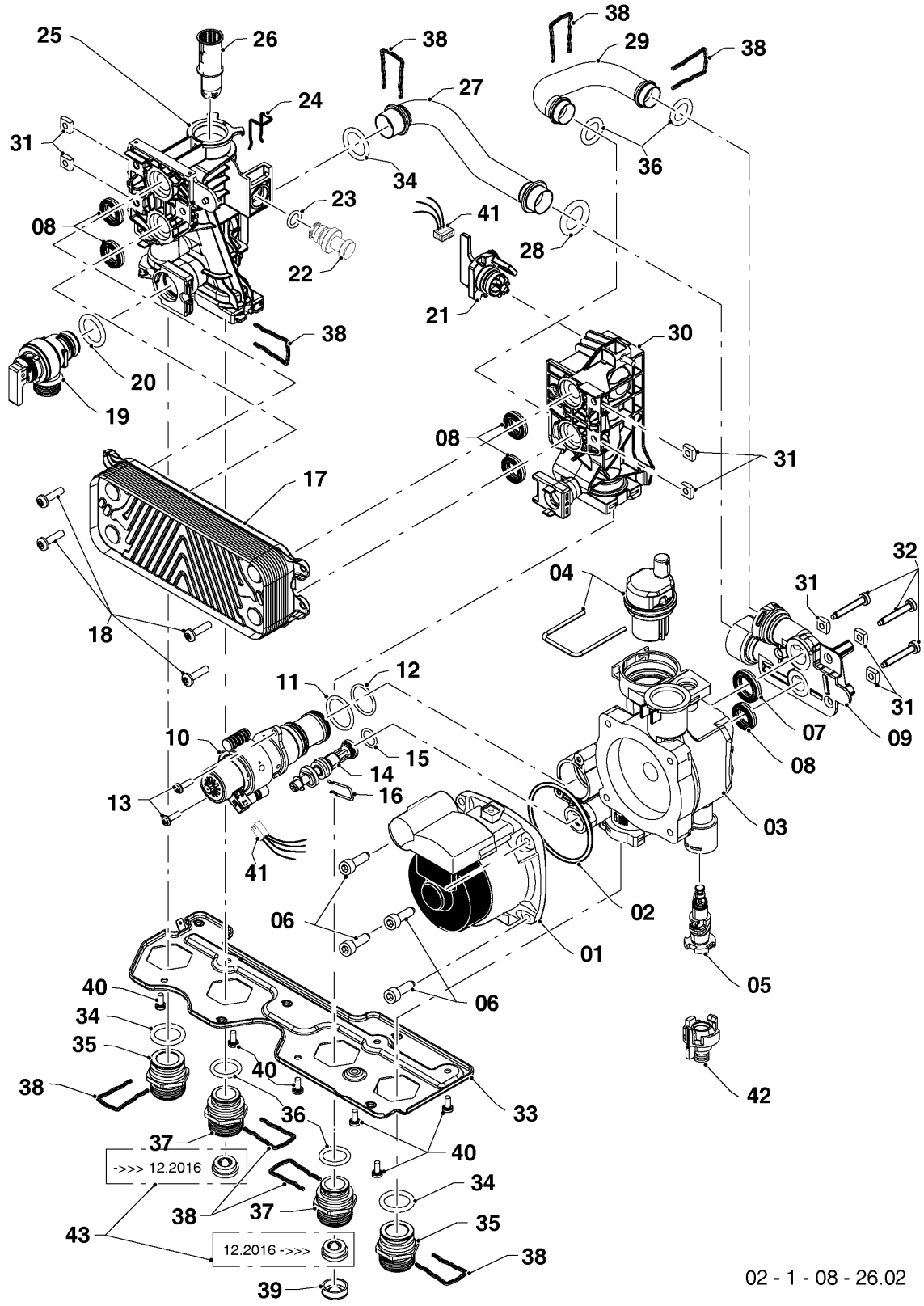

Wall-hung boilers (condensing combi)

25/30MKV-A Lynx Condens (H-UA)

08b - Hydraulic parts

Поз.	Артикульный номер	Описание	Указание, замечание
01	0020186161	Pump motor	supplied with pos.06, it`s necessary to order also sealing ring (pos.02)
02	0020221829	O-ring	
03	0020207137	Housing, pump R-DIN	supply with pos. 02,04,05,06,07,08,11,12,13,15,16, 31,32,34,38
04	S1024500	Automatic de-aerator	
05	0020207138	Tap drain piece R-DIN	
06	0020207139	Screw, pump (x4)	
07	0020014182	Gasket, type C, (x10)	
08	0020014166	Gasket, type C, (x10)	
09	0020197547	Hydroblock	supply with pos. 07,08,28,31,32,36,38
10	0020097214	Diverter valve 3 way	supply with pos. 11,12,13
11	0020097224	O-ring, (x10)	
12	0020097226	O-ring, (x10)	
13	0020097227	Screw, (x10)	
14	0020014169	Bypass	supply with pos. 15, 16
15	0020014195	O-ring, (x10)	
16	0020047019	Clip, (x10)	
17	0020186154	Heat exchanger DHW, 18 plates	supply with pos. 08,18
18	A000024274	Screw, M5x20 H/E plate, (x25)	
19	0020047005	Pressure relief valve, 3 bar	supply with pos. 20,38
20	0020125448	O-ring, (x10)	
21	0020197555	Flow sensor	
22	0020097212	Plug, pressure sensor	supply with pos. 23, 24
23	0020014177	O-ring, (x10)	
24	0020097197	Clip, (x10)	

Wall-hung boilers (condensing combi)

25/30MKV-A Lynx Condens (H-UA)

08b - Hydraulic parts

Поз.	Артикульный номер	Описание	Указание, замечание
25	0020186163	Hydroblock	supply with pos. 08, 18, 20, 23, 24, 26, 31, 34, 36, 38, 40, Attention! Appliances produced after 03/2017 have the outlet for pressure sensor plugged (pos. 22). Spare part doesn`t have this outlet plugged! It is necessary to use plug, oring and clip, whic
26	0020014178	Filter	
27	0020186168	Tube, by-pass	supply with pos. 28,34,38
28	0020097187	O-ring, (x10)	
29	0020186167	Tube, pump-SHE	supply with pos. 36,38
30	0020186165	Hydroblock	supply with pos. 08,18,21, 31,36,38,40
31	0020038639	Nut, (x3)	
32	0020097193	Screw, M5x33, (x10)	
33	0020207116	Support bracket	supply with pos. 40
34	0020195272	O-ring, (x10)	
35	0020186172	Nipple, G3/4 brass, HW	supply with pos. 34, 38
36	0020166932	O Ring, (x10)	
37	0020186171	Nipple, G3/4, DW	supply with pos. 36, 38
38	0020014176	Clip, (x10)	
39	0020014159	Filter D=20mm	
40	0020097184	Screw, (x10)	
41	0020207121	Wiring harness, combi (CLP)	
42	0020097336	Tap drain piece	
43	05430300	Water quantity limter (x10)	25/30MKV-A Lynx Condens (H-UA), since 12.2016 placed in boiler`s DHW inlet (right)

Wall-hung boilers (condensing combi)

25/30MKV-A Lynx Condens (H-UA)

08c - Connection parts

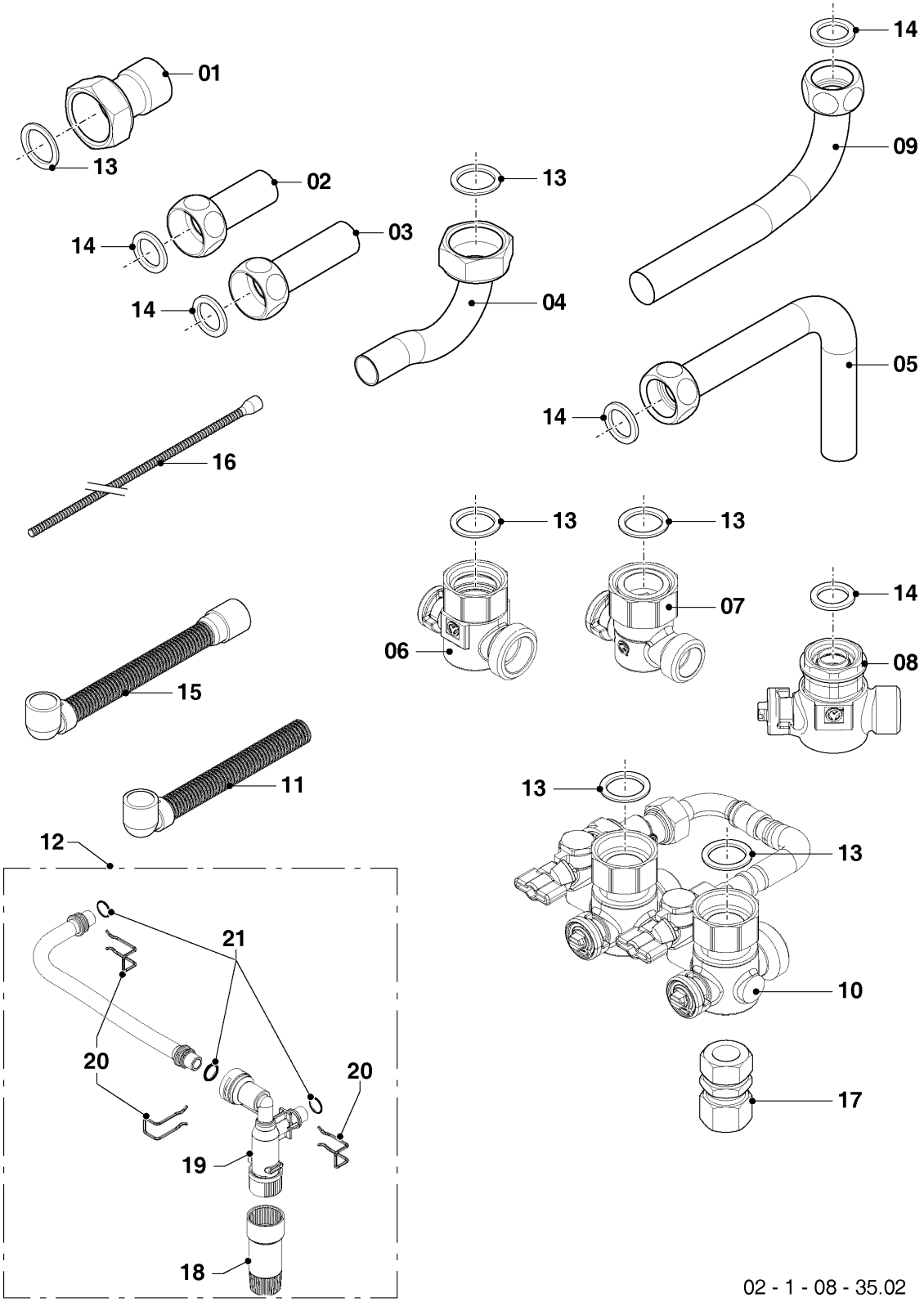

02 - 1 - 08 - 35.02

Wall-hung boilers (condensing combi)

25/30MKV-A Lynx Condens (H-UA)

08c - Connection parts

Поз.	Артикульный номер	Описание	Указание, замечание
01	-	-	not for these appliances
02	-	-	not for these appliances
03	-	-	not for these appliances
04	-	-	not for these appliances
05	-	-	not for these appliances
06	-	-	not for these appliances
07	-	-	not for these appliances
08	-	-	not for these appliances
09	-	-	not for these appliances
10	-	-	not for these appliances
11	-	-	not for these appliances
12	0020203963	Non-return valve	
13	2000801883	Sealing ring, 3/4, (x10)	
14	0020137104	Washer 13,7-18x1,5mm (x10)	
15	-	-	not for these appliances
16	0020211450	Hose	
17	-	-	not for these appliances
18	S1006800	Handle extension adapter	
19	0020212572	Filling cock	
20	0020097197	Clip, (x10)	
21	2000801950	O-ring, for pipe, (x20)	

Wall-hung boilers (condensing combi)

25/30MKV-A Lynx Condens (H-UA)

12 - Control panel

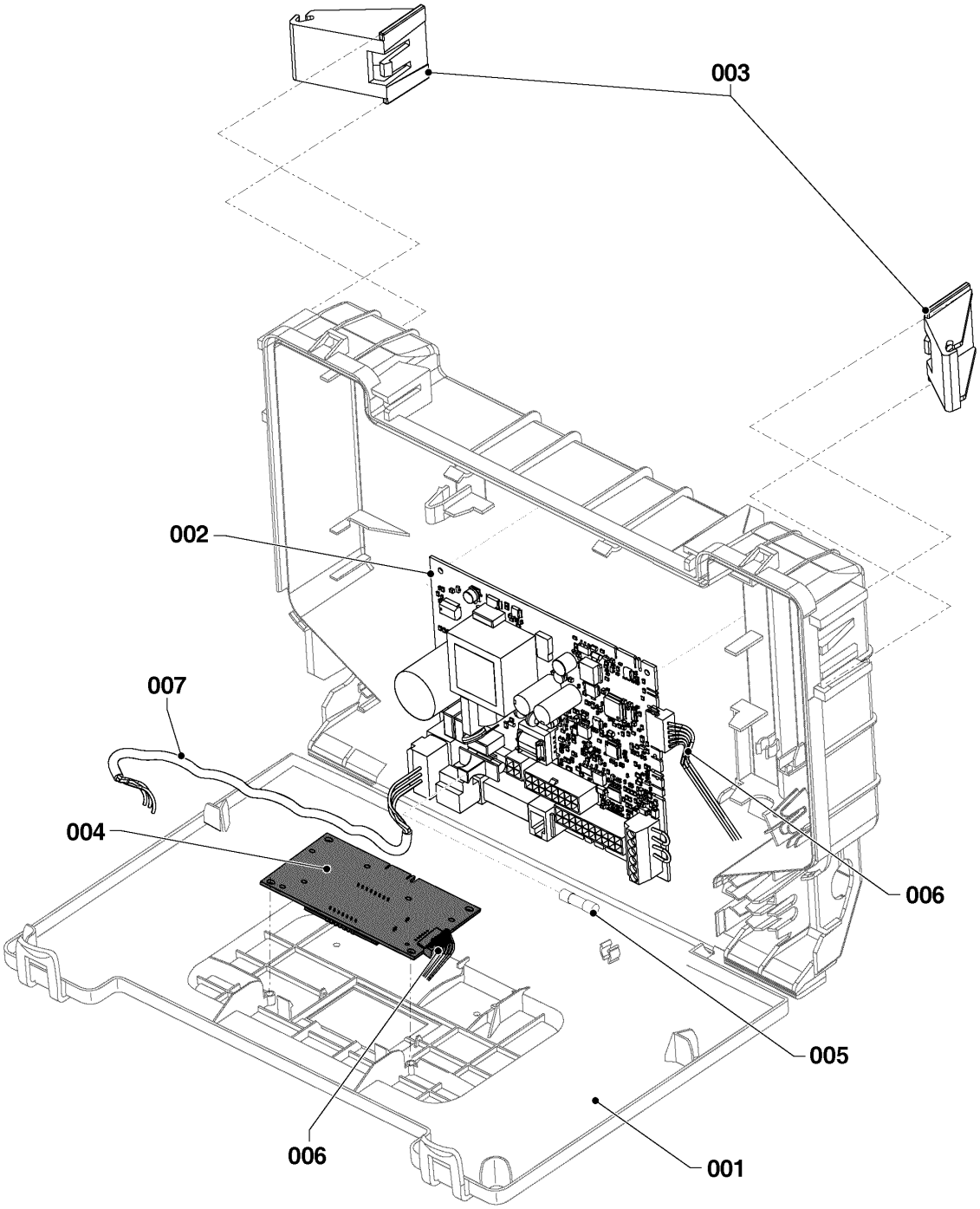

02 - 1 - 12 - 11

Wall-hung boilers (condensing combi)

25/30MKV-A Lynx Condens (H-UA)

12 - Control panel

Поз.	Артикульный номер	Описание	Указание, замечание
001	0020208829	Control box	
002	0020273088	PCB	
003	0020214345	Spacer	
004	0020195575	Display	
005	0020065257	Fuse, 2,0 A T2H, (x10)	
006	0020203976	Wiring harness	
007	0020084505	Supply harness	